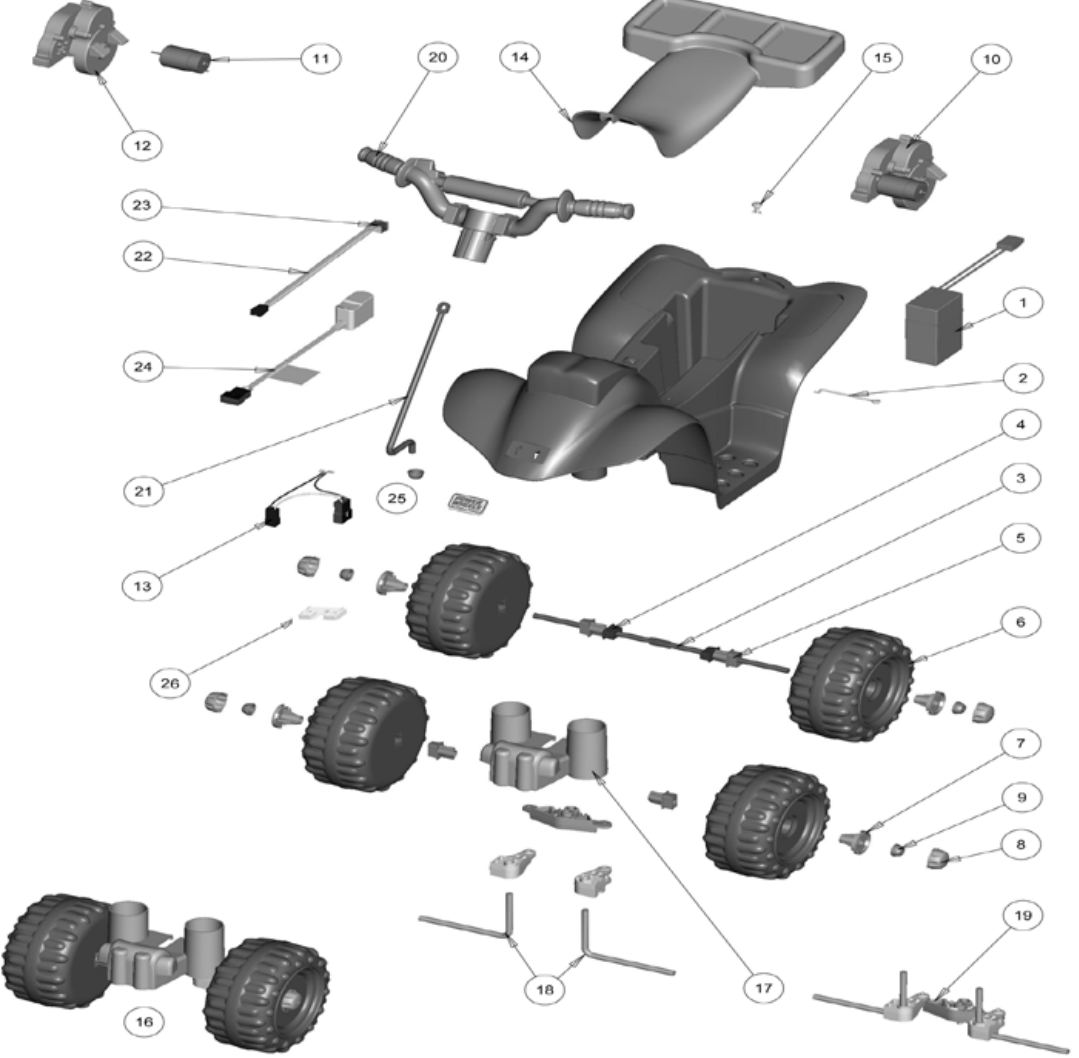

X3050 Camo Lil Quad PW Toddler Series	
Age Range:	12-36 Months
Weight Limit:	40 Lbs
Surfaces:	Hard Surfaces
Speed:	2 MPH Forward
Colors:	Green Body/Black Wheels
Intro:	2011
Suggested Retail:	$79.99
Box Dimensions:	16.375" x 13" x 26.25" 17 Lbs
Warranty:	One Year Vehicle Six Months Battery

POWER WHEELS by Fisher-Price®

Item	Part #	Description	QTY
1	00801-1900	4 Amp internal fuse battery	1
2	74230-4129	Battery Retainer	1
3	77760-4529	Rear Axle for Lil Quad	1
4	76920-2549	Rectangular Bushing (no ext.)	2
5	N/A	Wheel Bushing w/ Extension	2
6	77760-2119	Wheel (black) for Lil Quad	4
7	X3050-2129	Bushing Retainer Cover for Lil Quad	4
8	X3050-2349	Cover Retainer Keeper for Lil Quad	2
9	0801-0604	.354 Black Retainer/Cap Nut.	2
10	**00968-3900**	**#10 Motor Gearbox Assm.**	**1**
11	**00968-3700**	**# 10 Motor Pinion Assm.**	**1**
12	**00968-3800**	**#10 Gearbox Assm.**	**1**
13	**77760-9699**	**Main Wiring Harness for Lil Quad**	**1**
14	X3050-6149	Seat for Lil Quad (black)	1
15	78570-2439	J Lock Fastener	1
16	X3050-9139	Front Wheel Assembly for Lil Quad	1
17	K0452-2139	Brush Guard	1
18	77760-4519	Front Axle for Lil Quad	2
19	K0451-9329	Steering Linkage	1

Item	Part #	Description	QTY
20	X3050-9209	Handlebar Assembly w/Harness	1
21	N/A	Steering Column for Lil Kawasaki	1
22	**77760-9699**	**Handlebar Wire Harness for Lil Quad**	**1**
23	**00801-0697**	**Switch Signalux - 2 prong**	**1**
24	00801-1781	Charger 4amp fused - 6volt	1
25	J8473-2359	Steering Column Cap	1
26	00801-2097	Steering Column Clip	1

Parts Not Shown

Part #	Description	QTY
00801-1503	PW Emblem	1
00905-0116	3/8" -16 Lock Nut	1
00989-1078	Manual for Lil Quad	1
0801-0228	Screw Truss HD 8x7/8	1
0801-0253	Washer. 5/16	2
X3050-0310	Label Sheet for Lil Quad	1

Bold and underlined parts are to be purchased and installed by Service Centers only. These items may not be sold directly to consumers by Service Centers or Fisher-Price.

8/31/2015 12:48