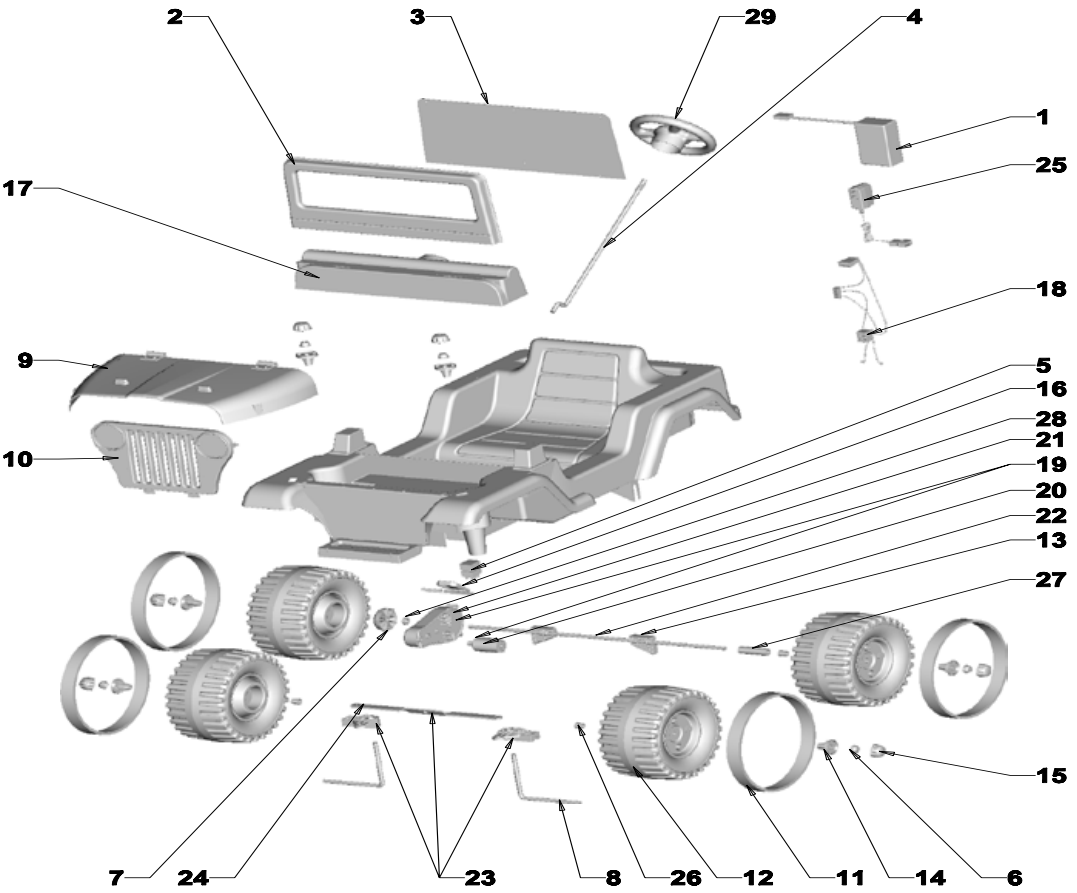


**N9732**
**BARBIE JEEP BARBIE WRANGLER**
**PRESCHOOL SERIES**

| | |
|---|---|
| Age Range: | 1 1/2 - 4 Years |
| Weight Limit: | 50 LB |
| Surfaces: | Asphalt and Other Hard Surfaces |
| Speed: | 2.5 Forward/Reverse |
| Colors: | Pink with Purple Wheels |
| Intro: | 2009 |
| Suggested Retail: | $87.29 |
| Box Dimensions: | 38" x 26.375" x 17.125" |
| Warranty: | One Year Vehicle<br>Six Months Battery |

POWER WHEELS by Fisher-Price®

| Item | Part # | Description | QTY |
|---|---|---|---|
| 1 | 00801-1457 | 4 AMP INTERNAL FUSE BATTERY | 1 |
| 2 | N9732-2339 | WINDSHIELD FRAME | 1 |
| 3 | 3800-6733 | WINDSHIELD | 1 |
| 4 | N9356-4409 | STEERING COLUMN | 1 |
| 5 | 00801-1773 | CONTROL SWITCH F/R | 1 |
| 6 | 0801-0604 | .354 RETAINER - PALNUT | 4 |
| 7 | 73233-2239 | DRIVER | 1 |
| 8 | 73241-4509 | FRONT AXLE | 2 |
| 9 | N9732-6119 | HOOD FOR BARBIE JEEP | 1 |
| 10 | N9732-2149 | GRILL | 1 |
| 11 | 3800-8643 | TRACTION BAND SET BLACK (2) | 4 |
| 12 | N9732-2459 | WHEEL - BLACK | 4 |
| 13 | 74770-2369 | AXLE POST SUPPORT | 2 |
| 14 | N9732-2129 | WHEEL BUSHING/ RETAINER | 6 |
| 15 | N9732-2049 | COVER RETAINER KEEPER | 6 |
| 16 | 74765-9389 | FOOTBOARD ASSEMBLY | 1 |
| 17 | N9732-2139 | DASH ASSEMBLY | 1 |
| **18** | **N9356-9799** | **WIRING HARNESS** | **1** |
| **19** | **74780-9509** | **MOTOR GEARBOX ASSY #3A** | **1** |
| **20** | **74590-9539** | **MOTOR PINION ASSEMBLY** | **1** |
| **21** | **74580-9269** | **3A GEARBOX W/O MOTOR** | **1** |
| 22 | N9356-4509 | REAR AXLE | 1 |
| 23 | 76181-4229 | STEERING LINKAGE - NO SUB | 1 |
| 24 | *SEE 23 | STEERING ROD | 1 |
| 25 | 00801-1483 | CHARGER 4Amp FUSED - 6V | 1 |
| 26 | 74770-2539 | ROUND BUSHING | 3 |
| 27 | 76136-4419 | REAR AXLE SPACER | 1 |
| 28 | 73233-2369 | SPACER - BLACK | 1 |

**Parts Not Shown**

| Part # | Description | QTY |
|---|---|---|
| 00801-1567 | WRENCH 9/16" (Assembly Tool) | 1 |
| 00905-0116 | 3/8" -16 LOCK NUT | HD Bag |
| 0801-0222 | SCREW PHIL HD 6x1/2 | HD Bag |
| 0801-0253 | WASHER. 5/16 | HD Bag |
| 0801-0255 | SCREW PHIL HD #10x1/2 | HD Bag |
| **0801-0538** | **FOOTSWITCH - 3 PIN** | **1** |
| 0801-0226 | CAP NUT .437 - BLACK | 2 |
| 0912-8001 | #8x3/4 INCH SCREW | HD Bag |
| N9732-9459 | HOODLATCH ASSEMBLY | 1 |
| N9732-2229 | SHIFTER LEVER | 1 |
| N9732-2749 | STEERING WHEEL CAP | 1 |
| N9732-2379 | FALSE MOTOR | 1 |
| 78480-2129 | SPARK PLUG WIRES | 1 |
| N9732-0320 | MAIN LABEL SHEET | 1 |
| N9732-0330 | SMALL LABEL SHEET | 1 |
| N9732-0920 | MANUAL | **1** |
| N9356-9279 | HARDWARE BAG | 1 |
| N9732-9289 | PARTS BAG | 1 |
| N9732-9679 | DASHBOARD SET | 1 |
| N9732-9719 | STEERING WHEEL ASSEMBLY | 2 |
| 74550-2689 | 7/16 ROUND AXLE BUSHING | 2 |

Bold and underlined parts are to be purchased and installed by Service Centers only. These items may not be sold directly to consumers by Service Centers or Fisher-Price.

4/27/2010 11:52